GAMAICA
A concept for an integral field spectrograph at Calar Alto

RUBÉN GARCÍA-BENITO

& the GAMAICA Team

ENCUENTRO RIA-TEC2SPACE:
INSTRUMENTACIÓN ASTRONÓMICA EN ESPAÑA

April 19-22, 2022

CSIC · Madrid

Rogelio Bernal©

THE INSTRUMENT. THE SURVEY

GAMAICA:
GAlaxy MApping Instrument at Calar Alto

P.I.

IAA AIP

Rubén García-Benito (IAA)
Jakob Walcher (AIP)

innoFSPEC
Innovative faseroptische Spektroskopie und Sensorik

Instituto de astronomía unam

UNIVERSIDAD DE GRANADA

GAMACA:
GAlaxy MApping at Calar Alto

GAMACA: GAlaxy MApping at Calar Alto

6 years

Andrómeda

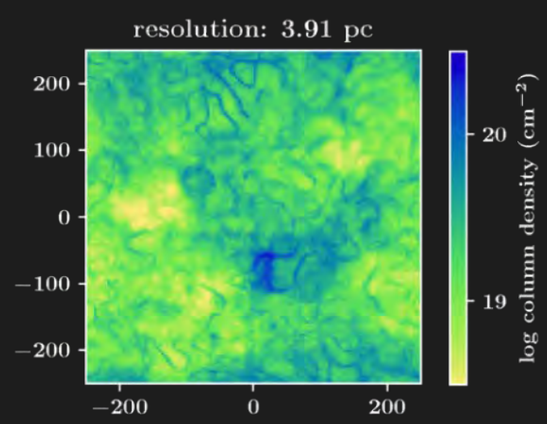

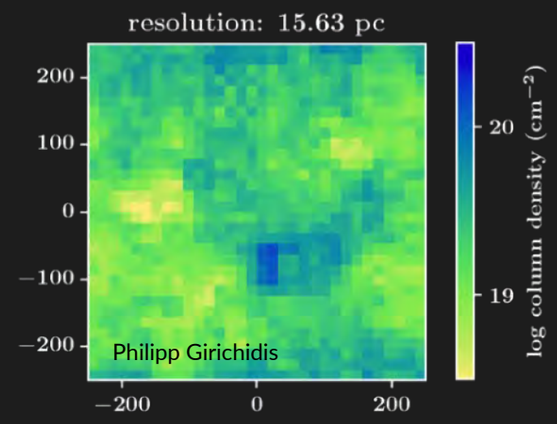

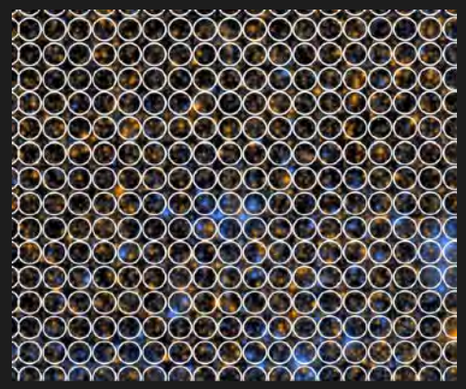

- ✅ High resolution ISM ~1600 HII regions
- ✅ Chemo-dynamics disk (200k RGB stars)

4 pc

Virgo

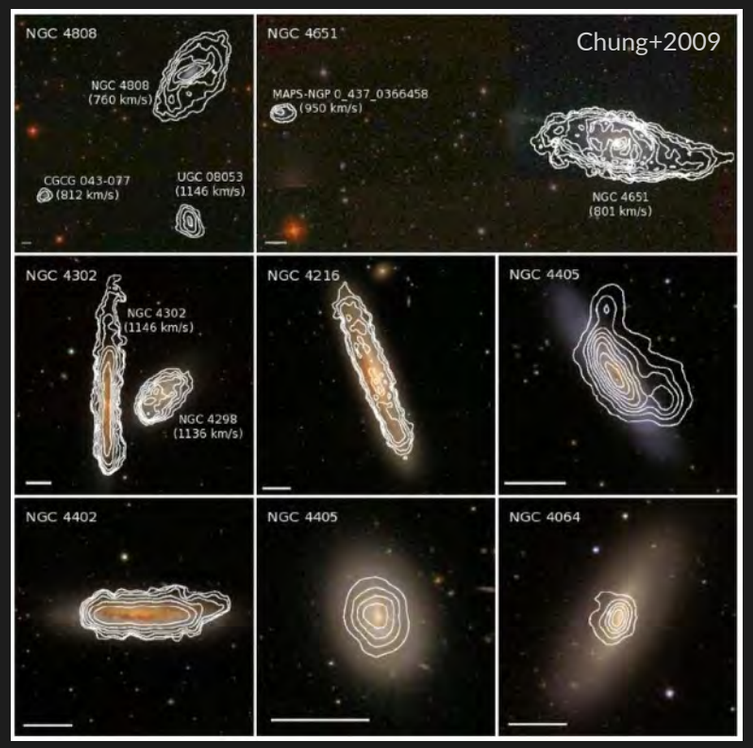

53 galaxies

HI data from VIVA sample
Possibility CO data

- ✅ ISM - ICM interaction
- ✅ Cluster environment on SFH

70 pc

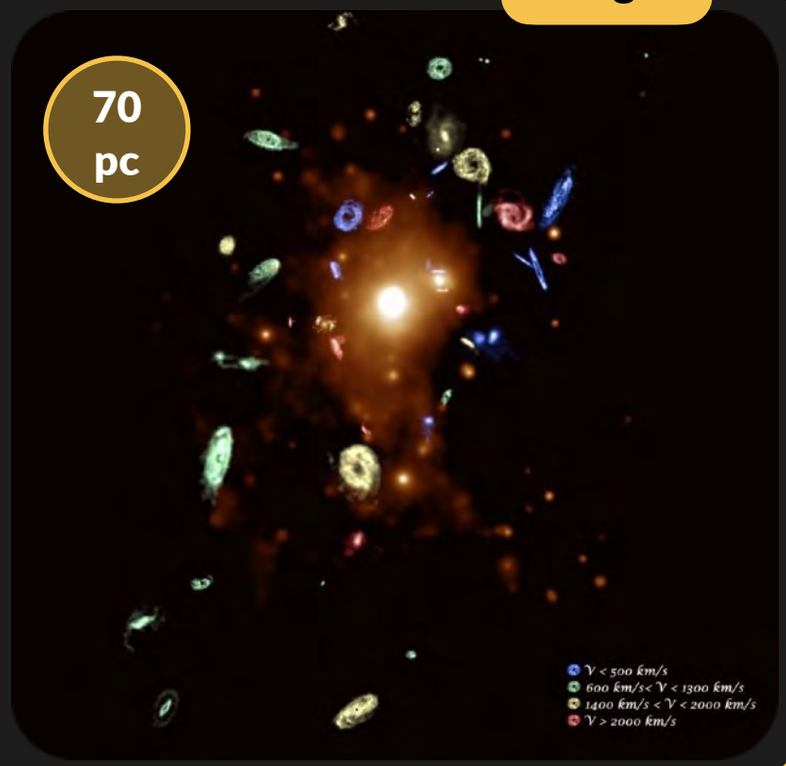

VIRGO@GAMACA
SPATIAL RESOLUTION

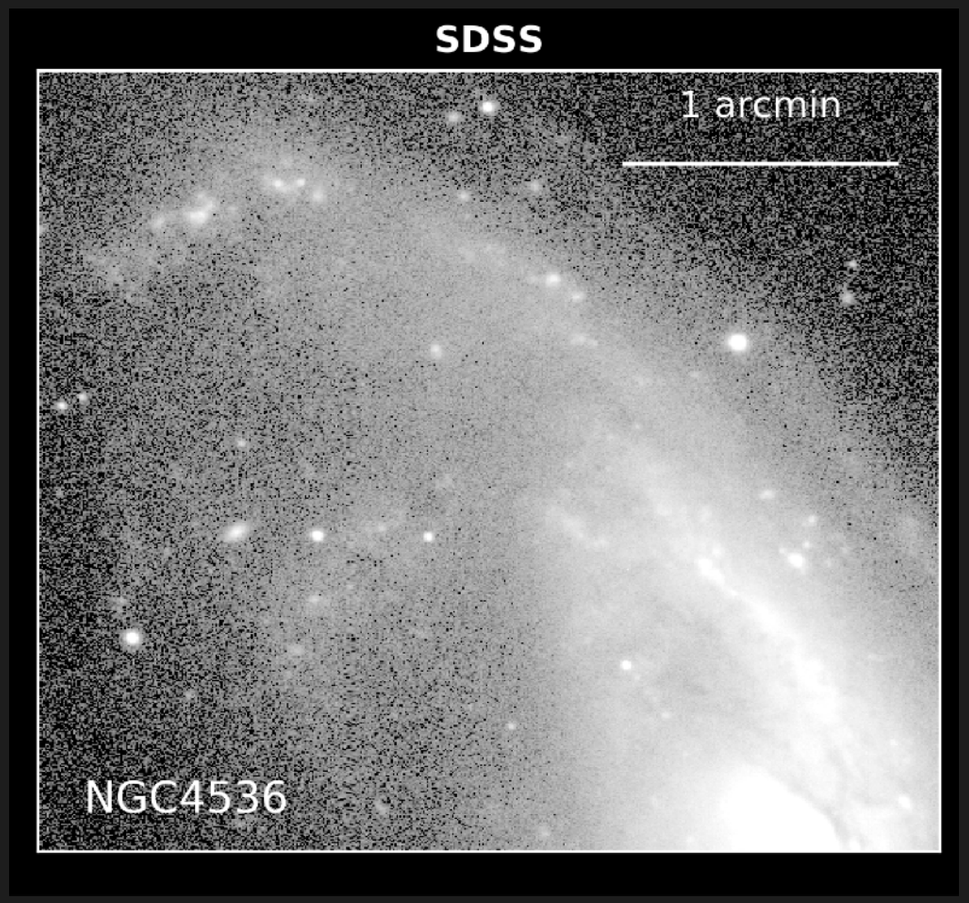

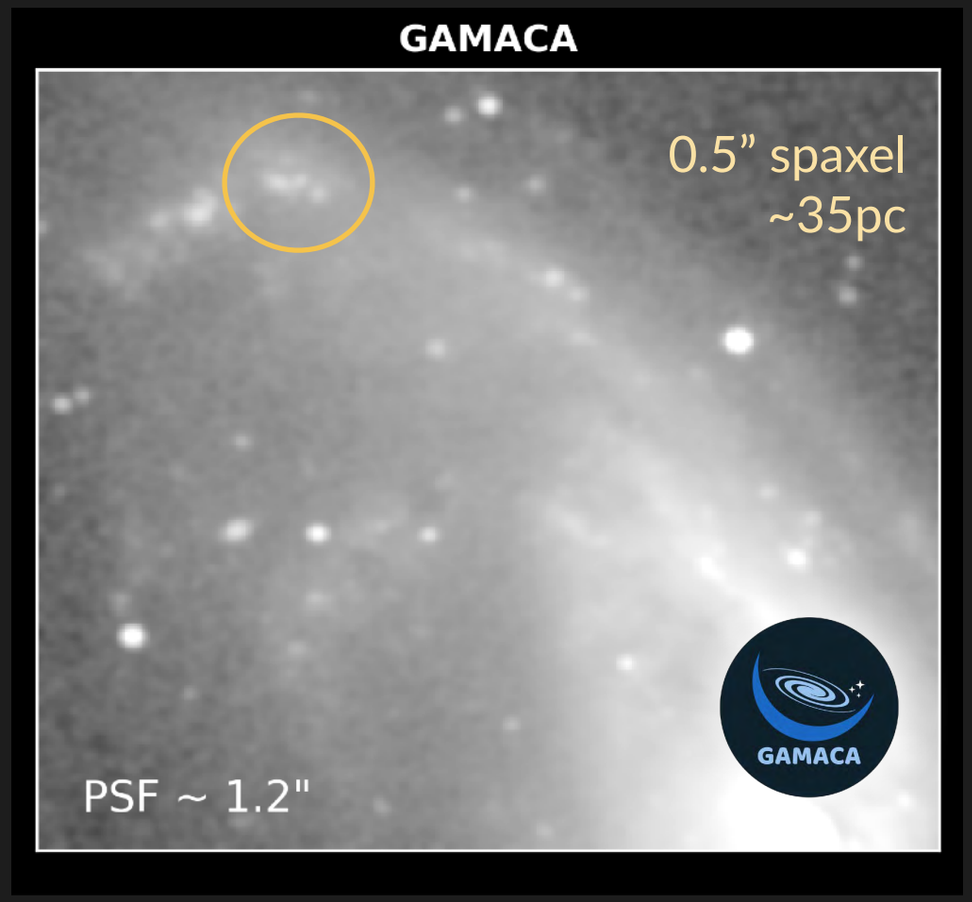

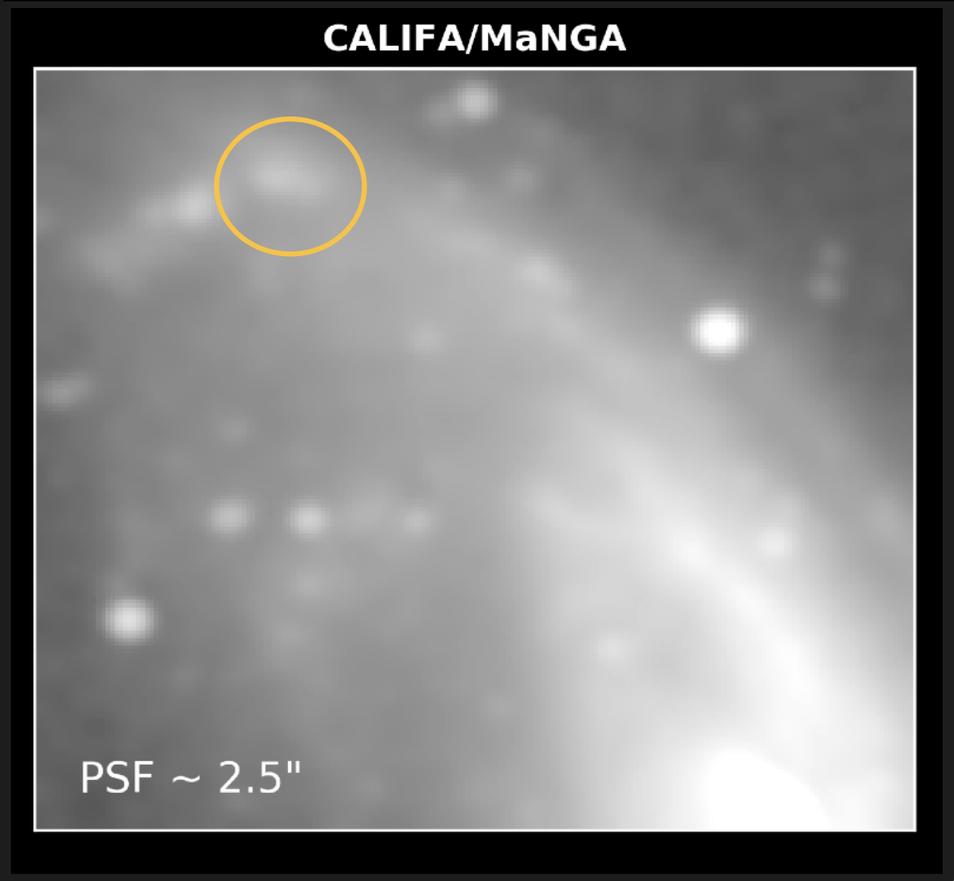

CALIFA ➜ PSF ~2.5” ➜ 1” spaxel
MaNGA ➜ PSF ~2.5” ➜ 0.5” spaxel

GAMAICA: GAlaxy MApping Instrument at Calar Alto

P.I.

IAA AIP

Rubén García-Benito (IAA)
Jakob Walcher (AIP)

innoFSPEC Innovative faseroptische Spektroskopie und Sensorik
instituto de astronomía unam
UNIVERSIDAD DE GRANADA

Feasibility Study

June 2021

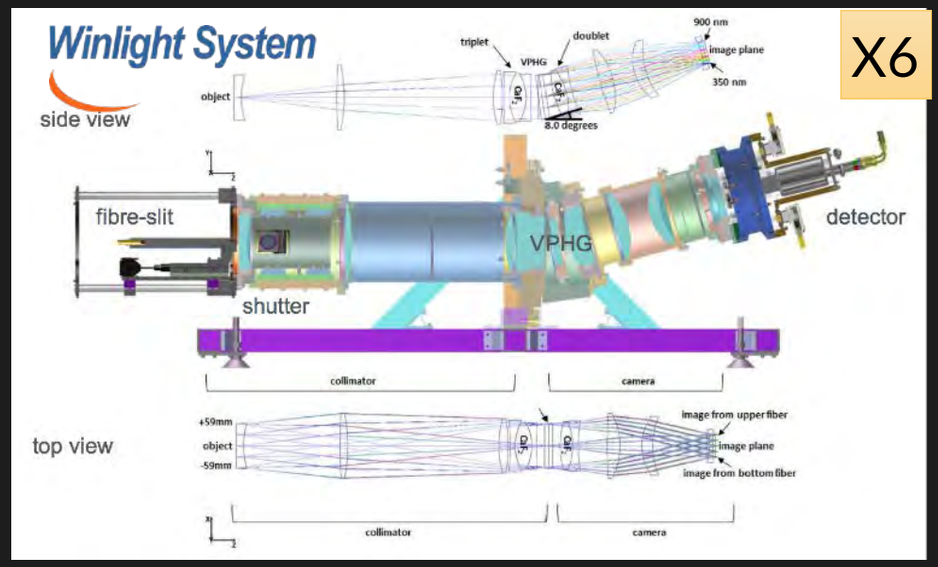

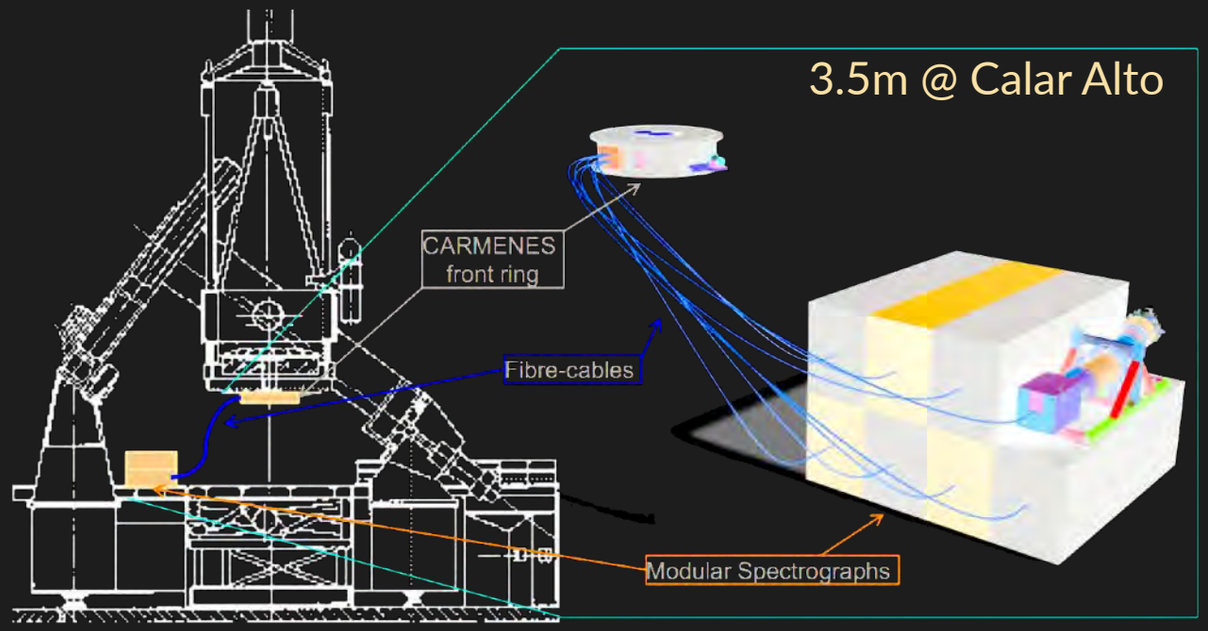

Top Level Requirements

Quantity	Science	Instrument	Constraint
Spatial sampling	4 pc @ M31 70 pc @ Virgo	1" ⌀ hex lenslets	Resolve HII regions RGB stars
Spectral resolution	80 km/s	R ~3000 (M31) R ~2200 (Virgo)	stellar velocities < 10 km/s
λ coverage	4200-6900 Å (M31) 3680-6900 Å (Virgo)	4200-6900 Å 3680-6900 Å	Compromise λ coverage
Field of View	maximal	1'x1'	Baseline 6 spectrographs
Resolution elements	maximal	3900 lenslets	650 fibers x 6

GAMACA SURVEY TEAM

Instituto de Astrofísica de Andalucía

Rubén García-Benito (co-PI), Rosa González Delgado, Enrique Pérez Jiménez, Enrique Pérez-Montero, Sara Cazzoli, Ascensión del Olmo, Jaime D. Perea Duarte, Josefa Masegosa, Isabel Márquez, Ancor Damas-Segovia

Leibniz Institut für Astrophysik Postdam

C.Jakob Walcher (co-PI), Martin Roth, Andreas Kelz, Genoveva Micheva, Christoph Pfrommer, Ivan Minchev, Matthias Steinmetz, Noam Libeskind, Lutz Wisotzki

Universidad de Granada

Isabel Pérez, Simon Verley

Universidad Nacional Autónoma de México (UNAM)

Sebastián Sánchez, Jorge K. Barrera Ballesteros, Gloria Gonzalez Delgado, Miriam Peña, Christophe Morisset, Leticia Carigi, Eduardo Lacerda, Alfredo Mejia, Artemi Camps

Science Team: Alexei Moiseev (SAO), Jesús Falcón Barroso (IAC), Rodrigo Ibata (Strasbourg), Sebastian Kamann (Liverpool), Ralf Klessen (ZAH), Eva Schinnerer (MPIA), H.-W. Rix (MPIA), Anne-Laure Melchior (ObsParis), Annette Ferguson (Edinburgh), Zhiyuan Li (Nanjing), José María Solanes (Barcelona)

GAMIACA INSTRUMENT TEAM

Feasibility Study

Instituto de Astrofísica de Andalucía

Miguel Andrés Sánchez Carrasco (SE, PM)
Santiago Becerril Jarque (former PM)
Rocío Calvo (ME)
Leire Elzaurdia (OE)
David Pérez (OE)
Miguel Abril (EE)
José Miguel Ibáñez (SWE)
Rubén García-Benito (co-PI)

Leibniz Institut für Astrophysik Postdam

Andreas Kelz (OE)
Daniel Sablowski (OE)
Svend M. Bauer (ME)
Tomas Fechner (EE)
C. Jakob Walcher (co-PI)

Universidad de Granada

Andrés María Roldán (EE)

Universidad Nacional Autónoma de México (UNAM)

Sebastián Sánchez

Winlight-Systems: Vincent Lapere (OE), Yoann Le Guern (ME)

MANAGEMENT & CONSORTIUM

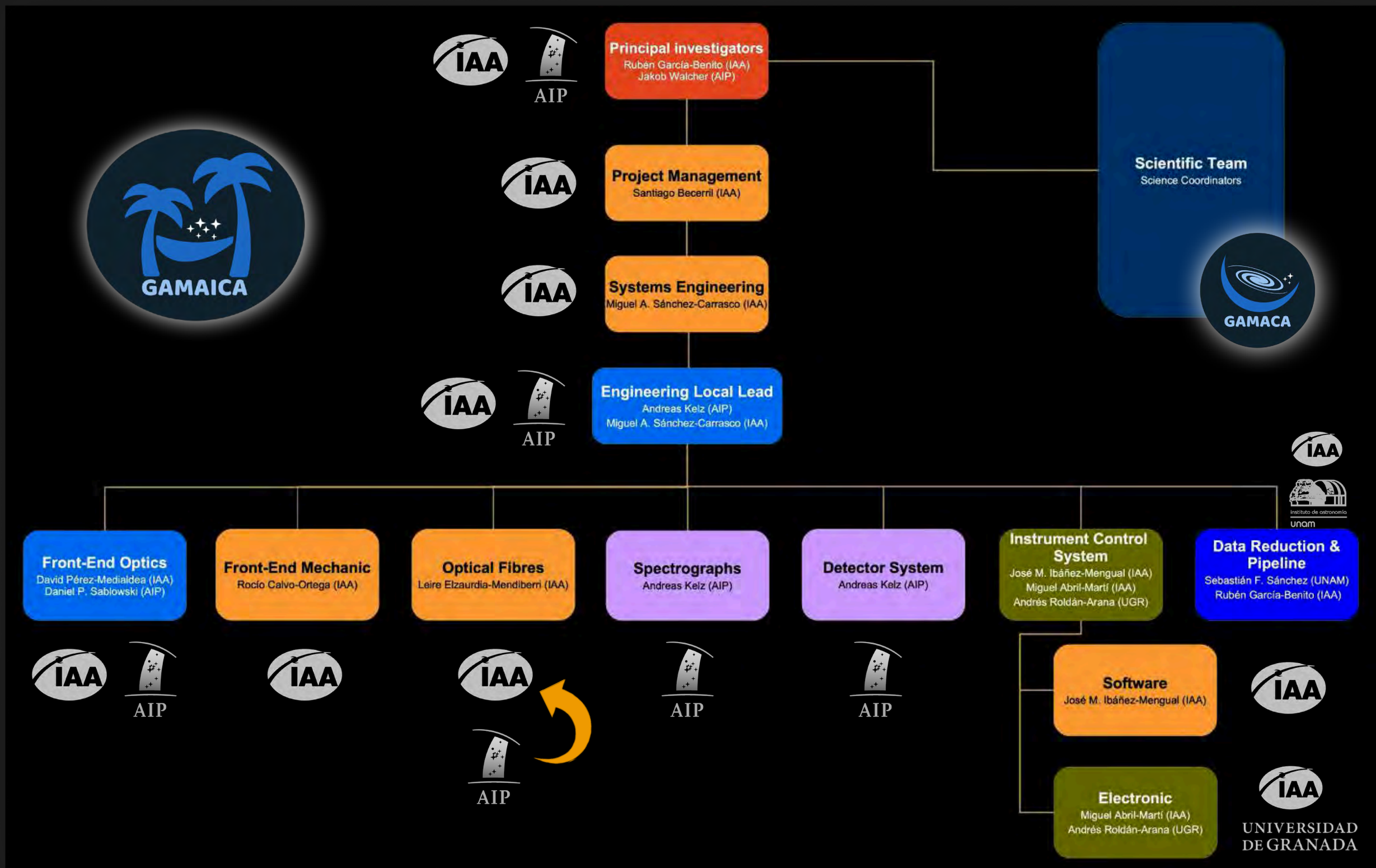

GAMAICA @ TELESCOPE

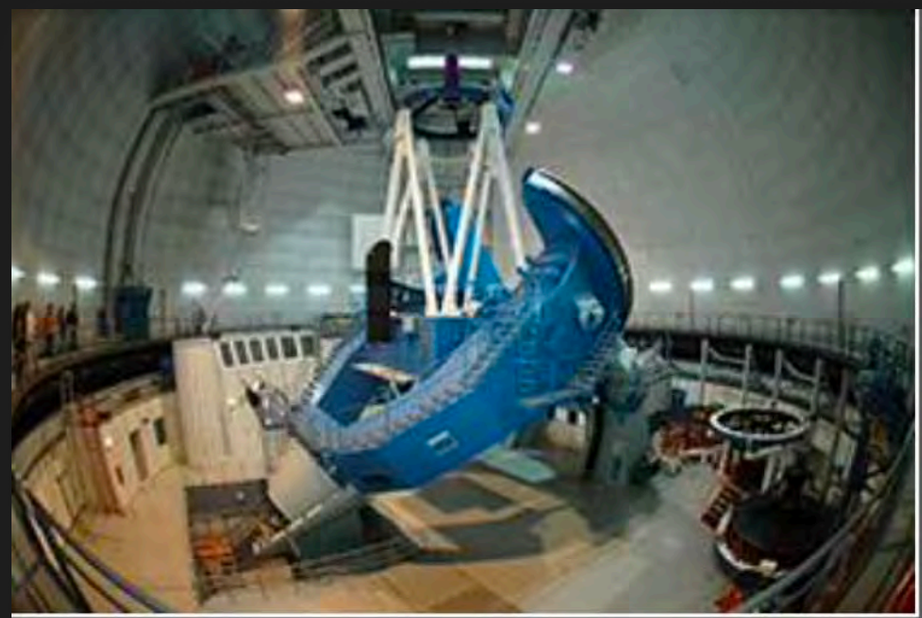

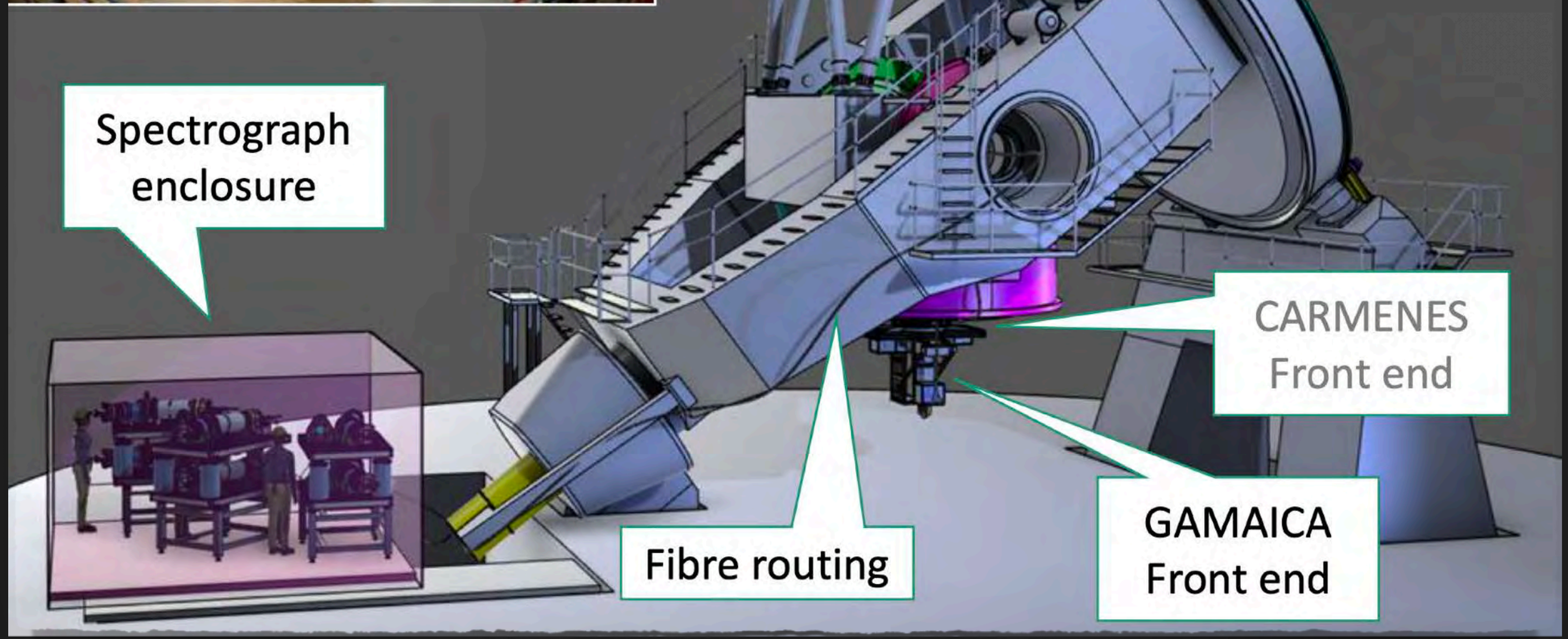

GAMAICA FRONT-END

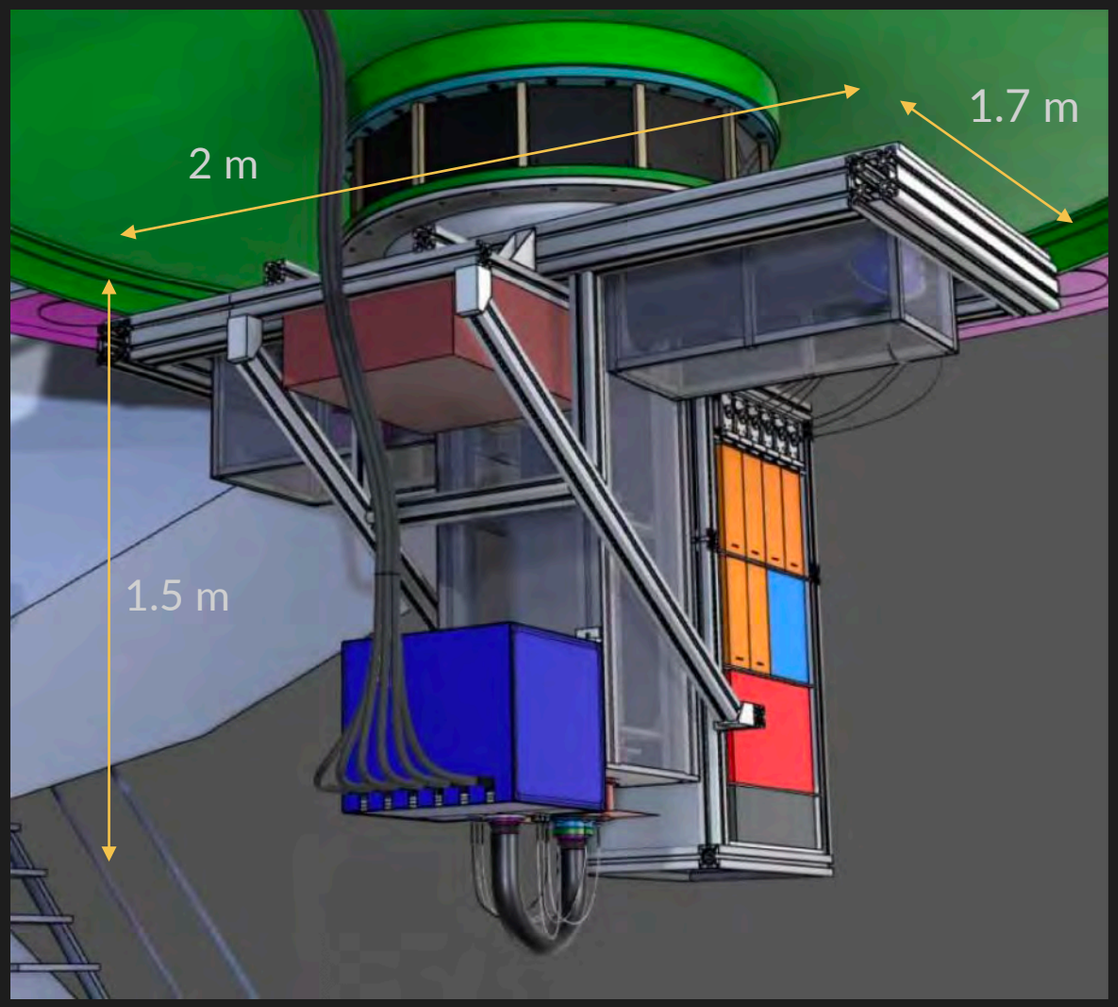

~500 kg

4 calibration lamps + 2 QTH lamps

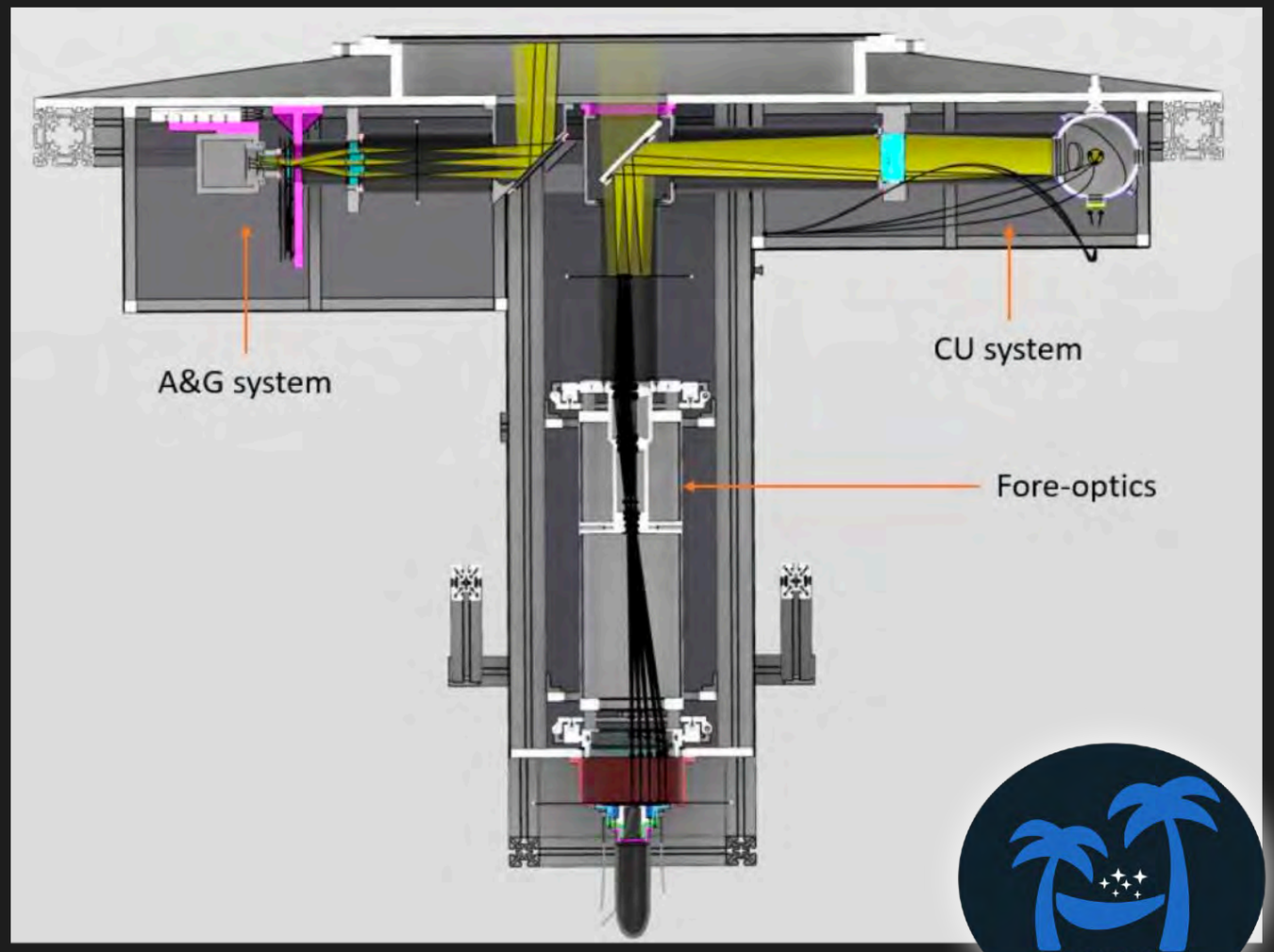

On-axis beam IFU
Off-axis beam A&G

GAMAICA IFU LAYOUT

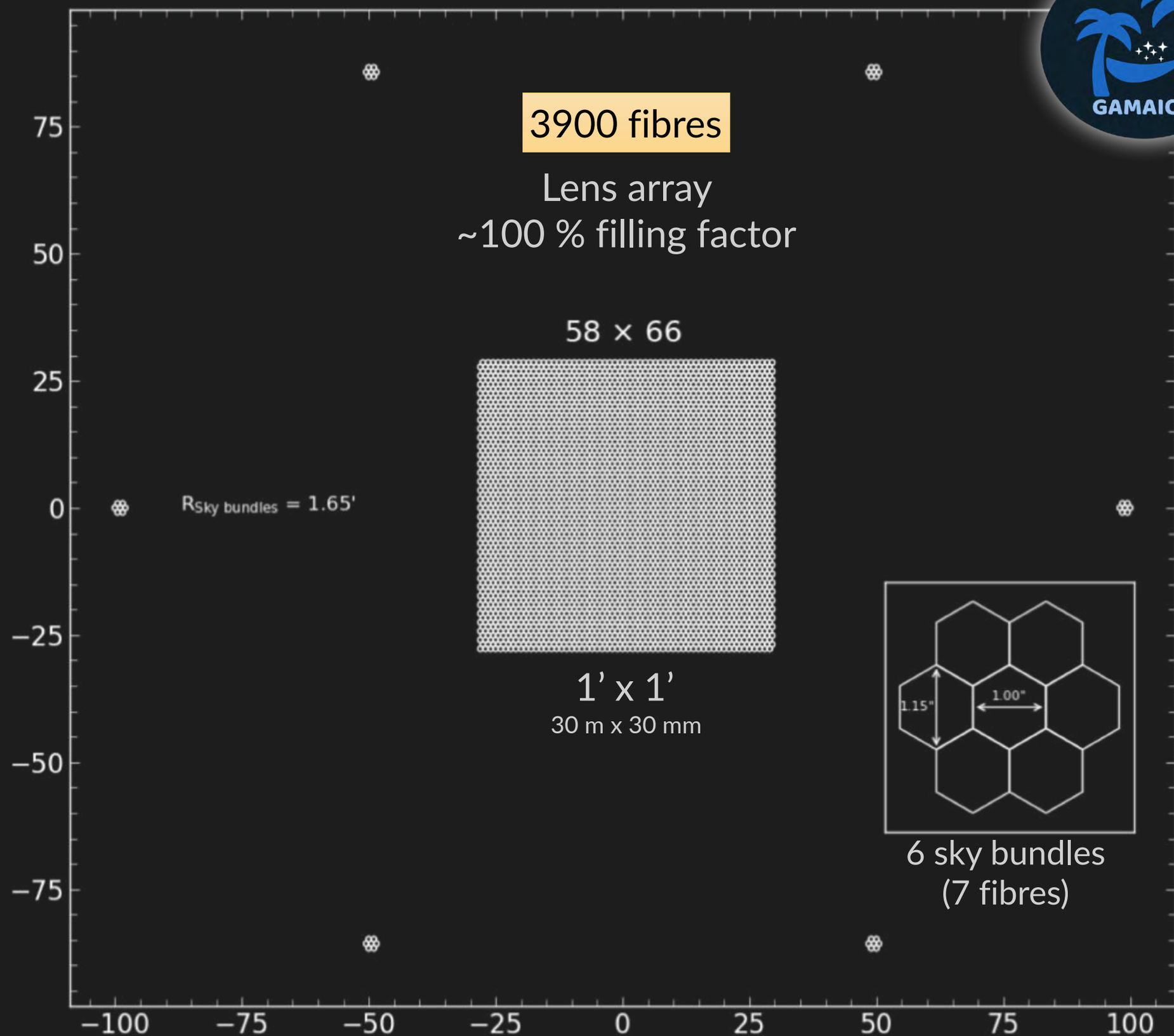

GAMACA SKY SUBTRACTION: OBSERVATION STRATEGY

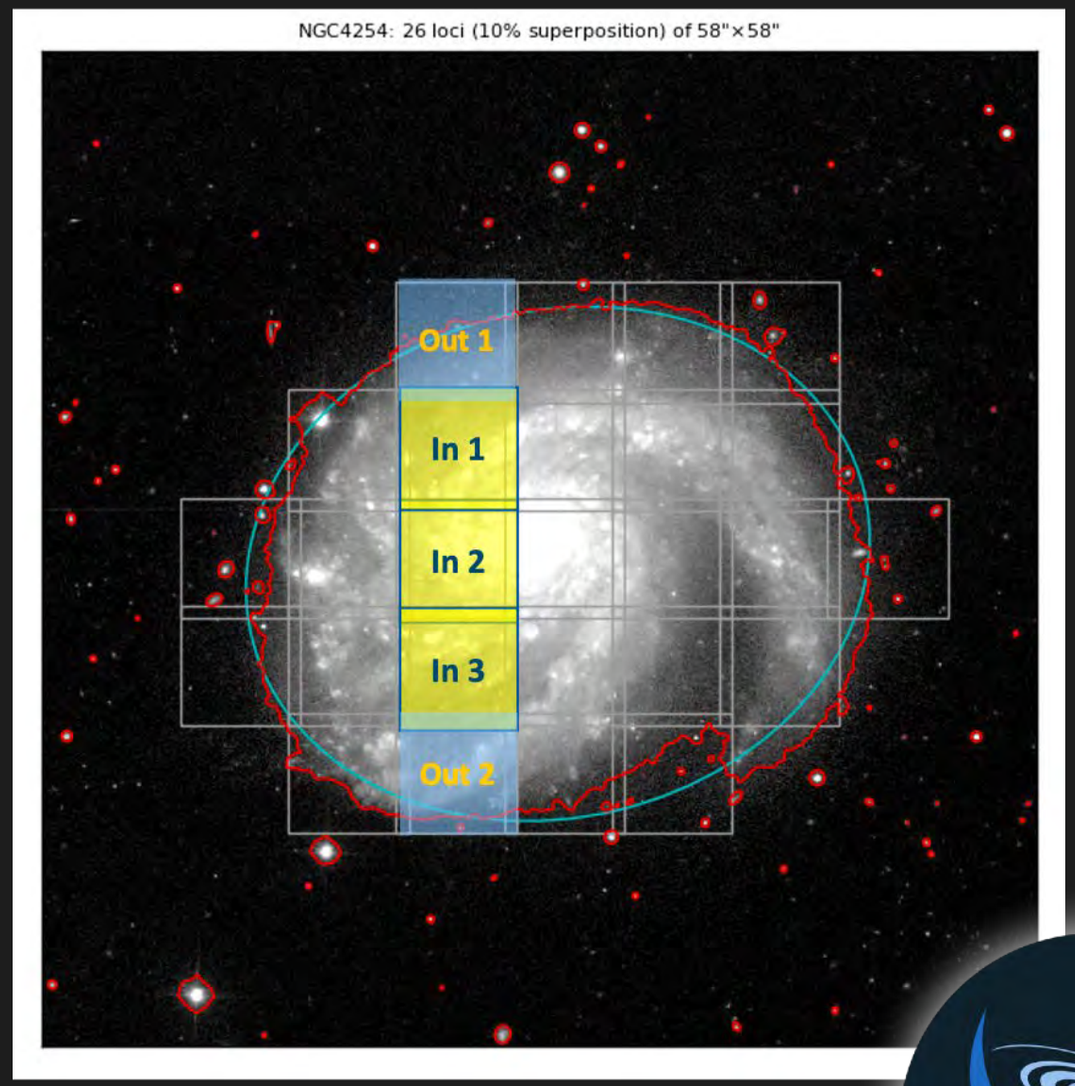

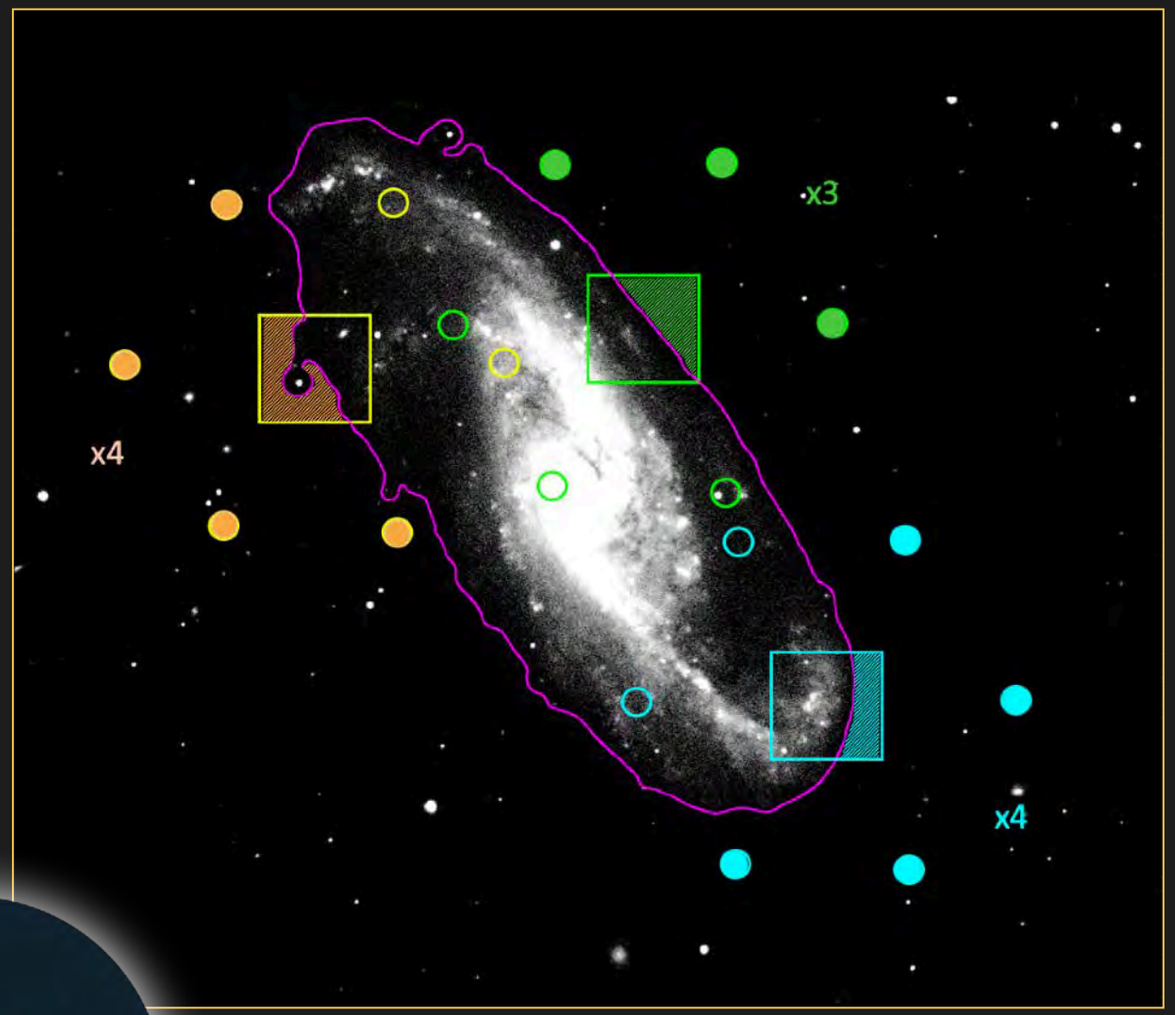

GAMAICA FIBRE & SLIT OUTPUT

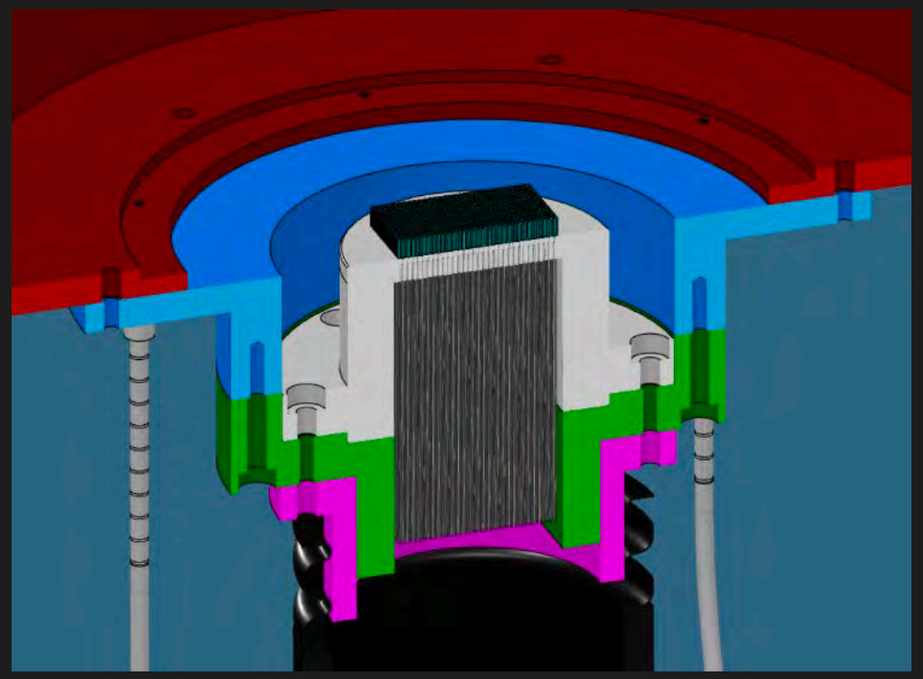

IFU connector

ARRAY CONFIGURATION

- Straight and flat fibre slit
- Parallel fibre axis
- Perpendicular and polished
- Mapped
- Silica material V-groove

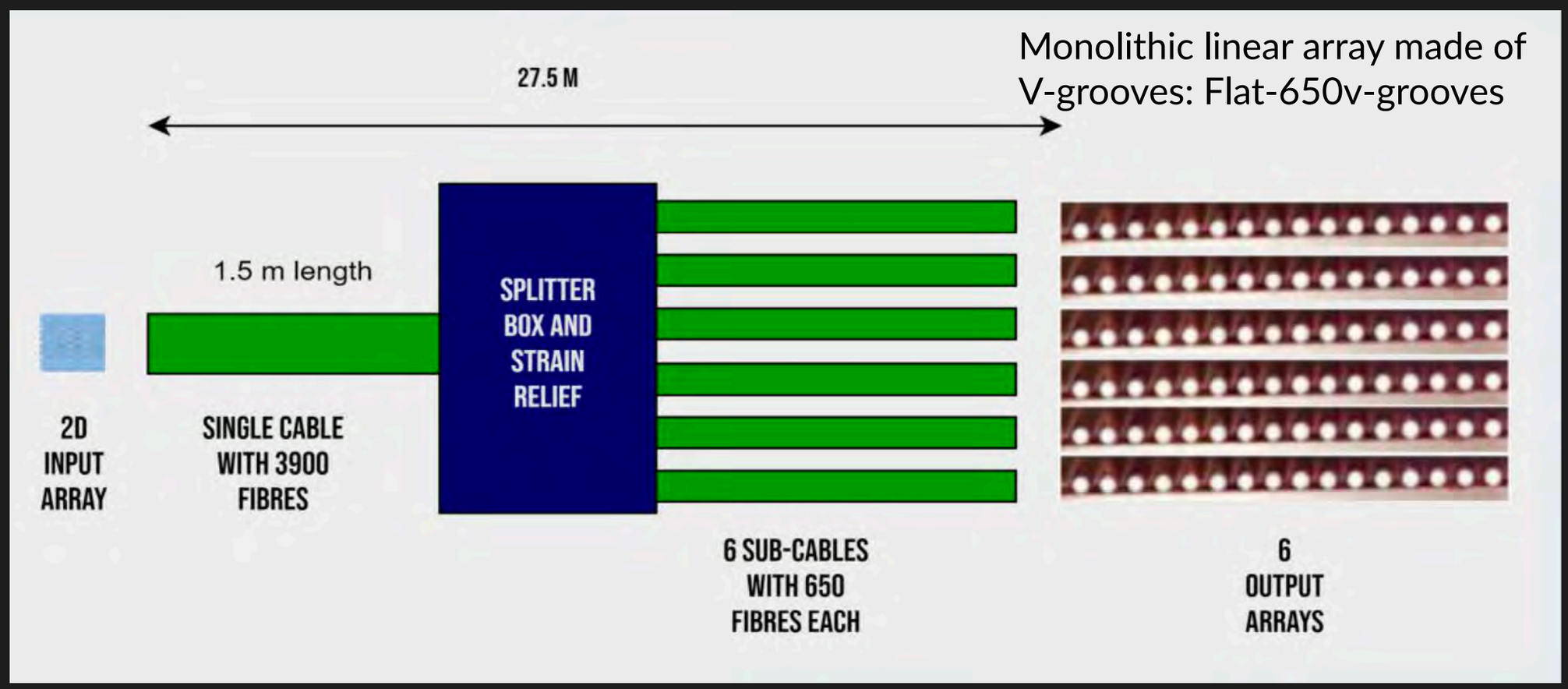

GAMAICA FIBRE ROUTING

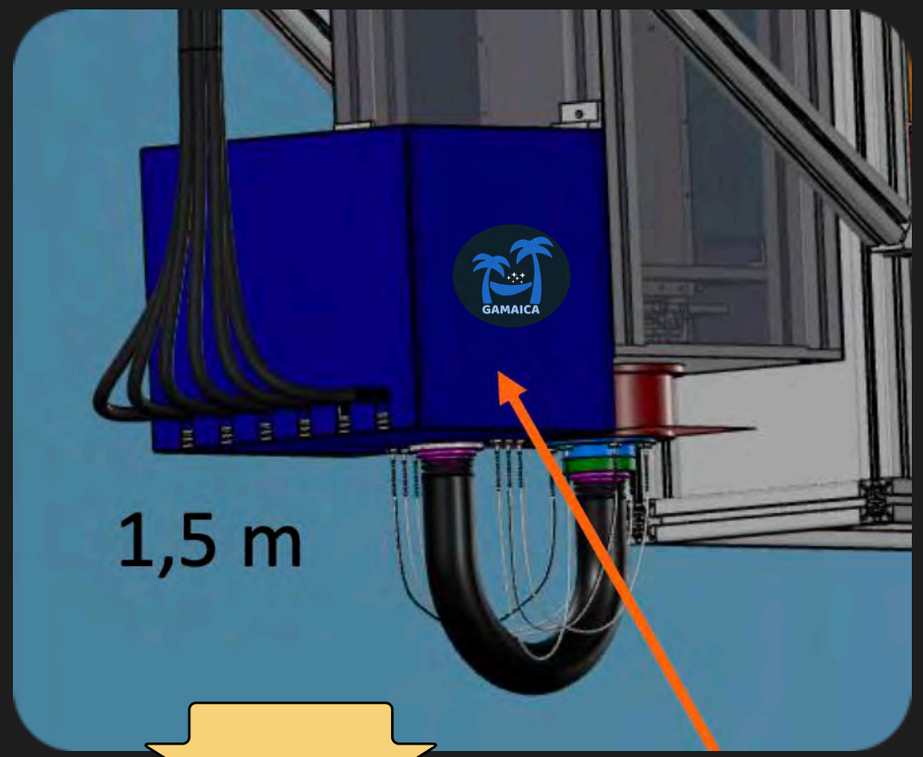

27.5 m

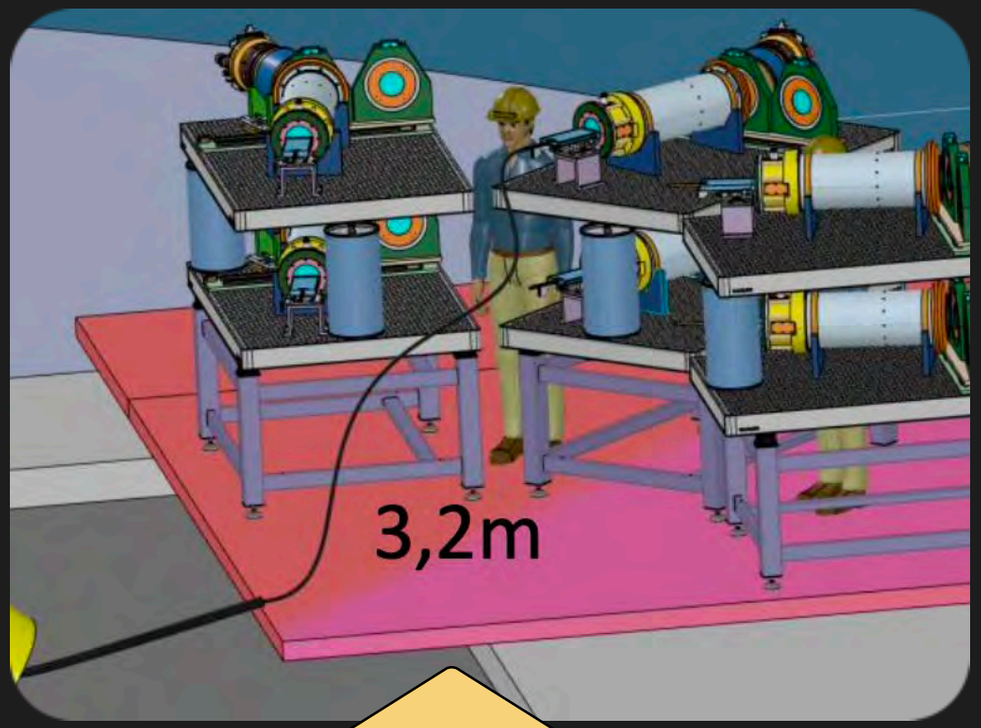

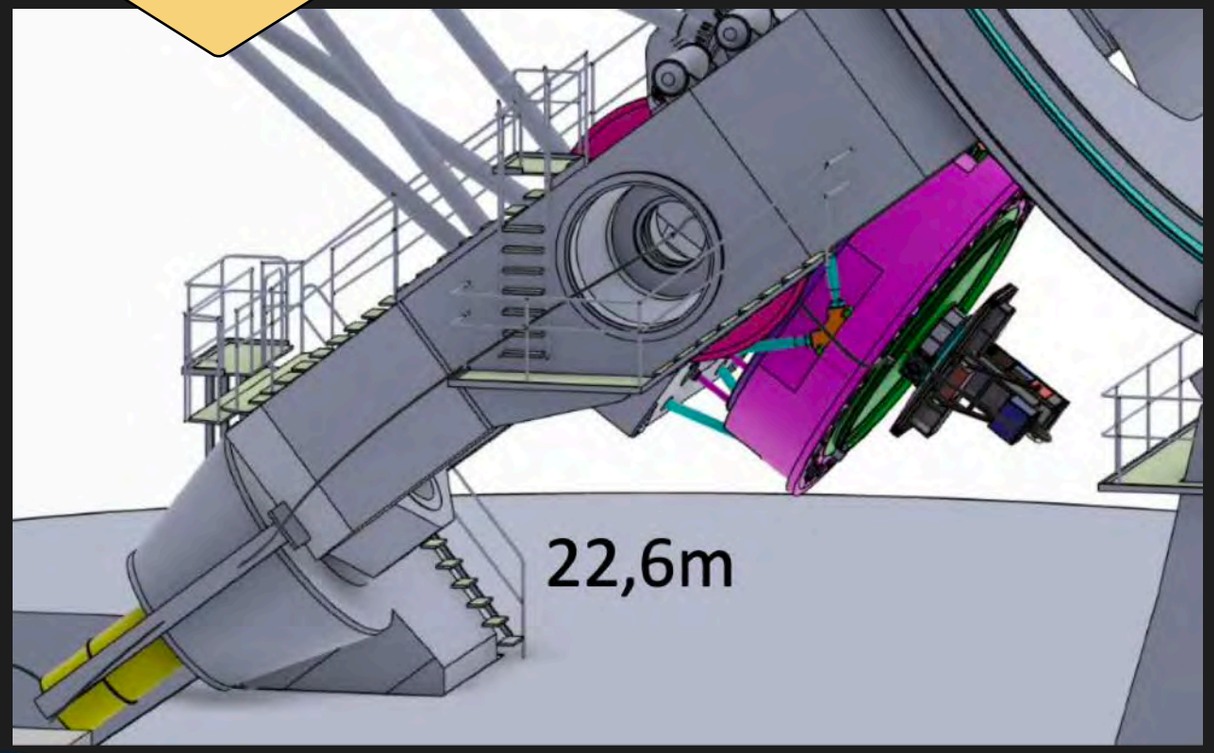

GAMAICA SPECTROGRAPH OPTO-MECHANICAL DESIGN

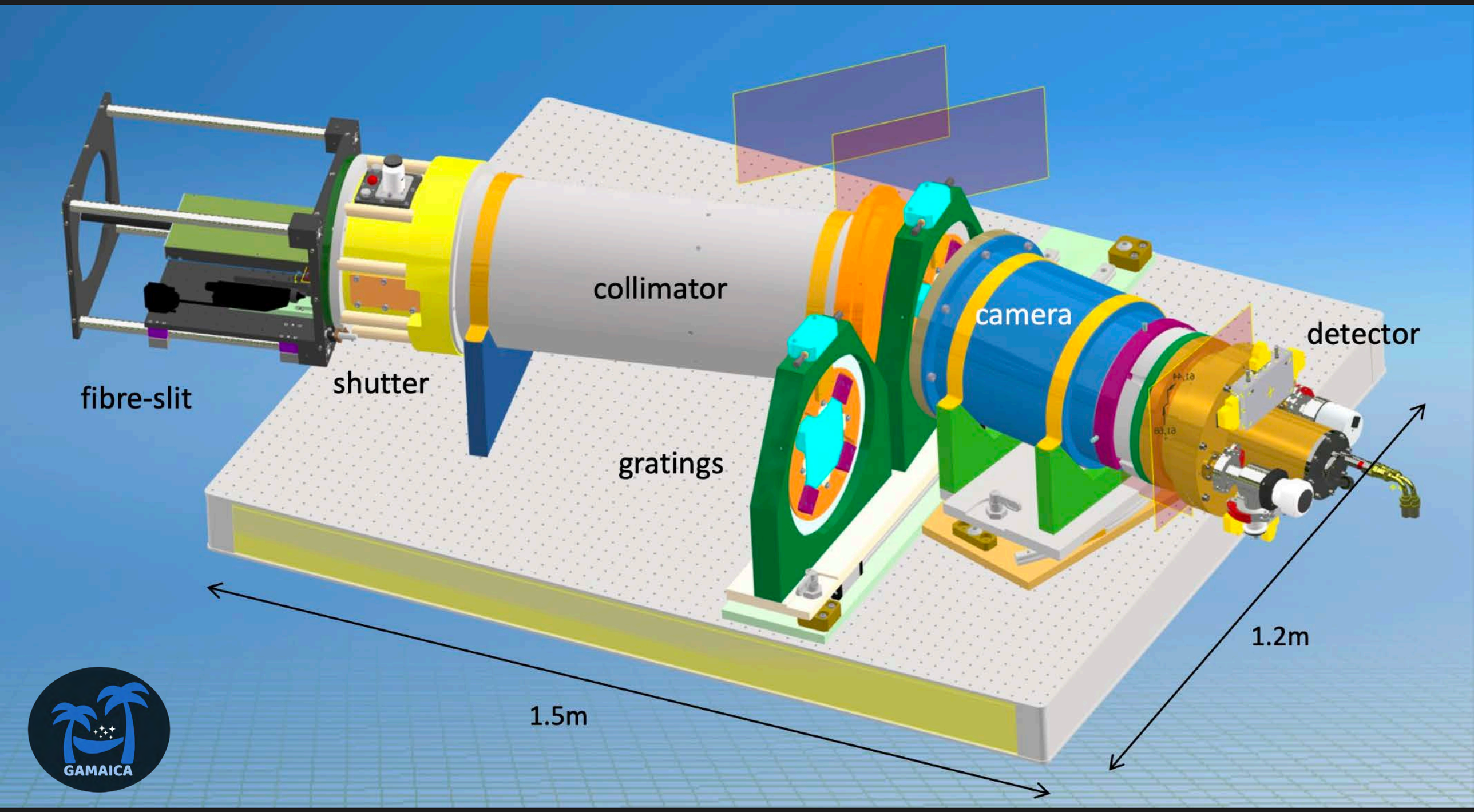

GAMAICA SPECTROGRAPH CONFIGURATION AND QUALITY

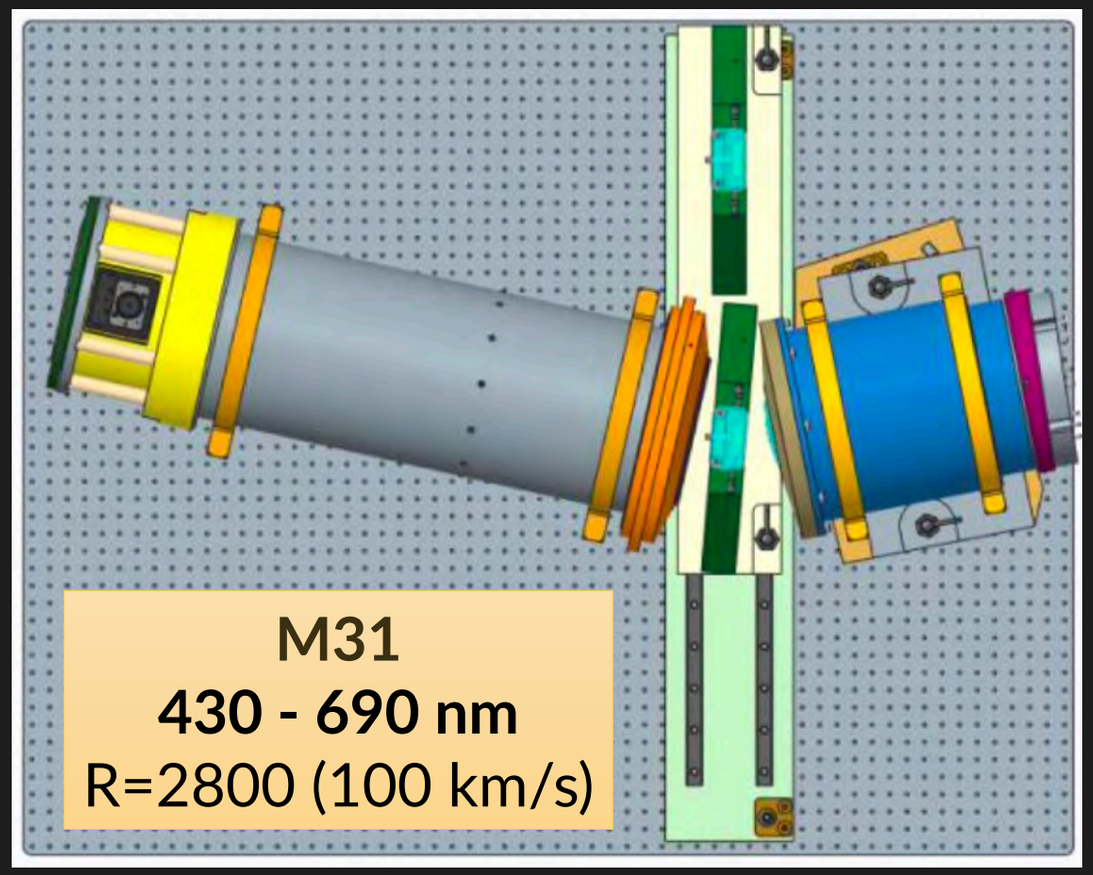

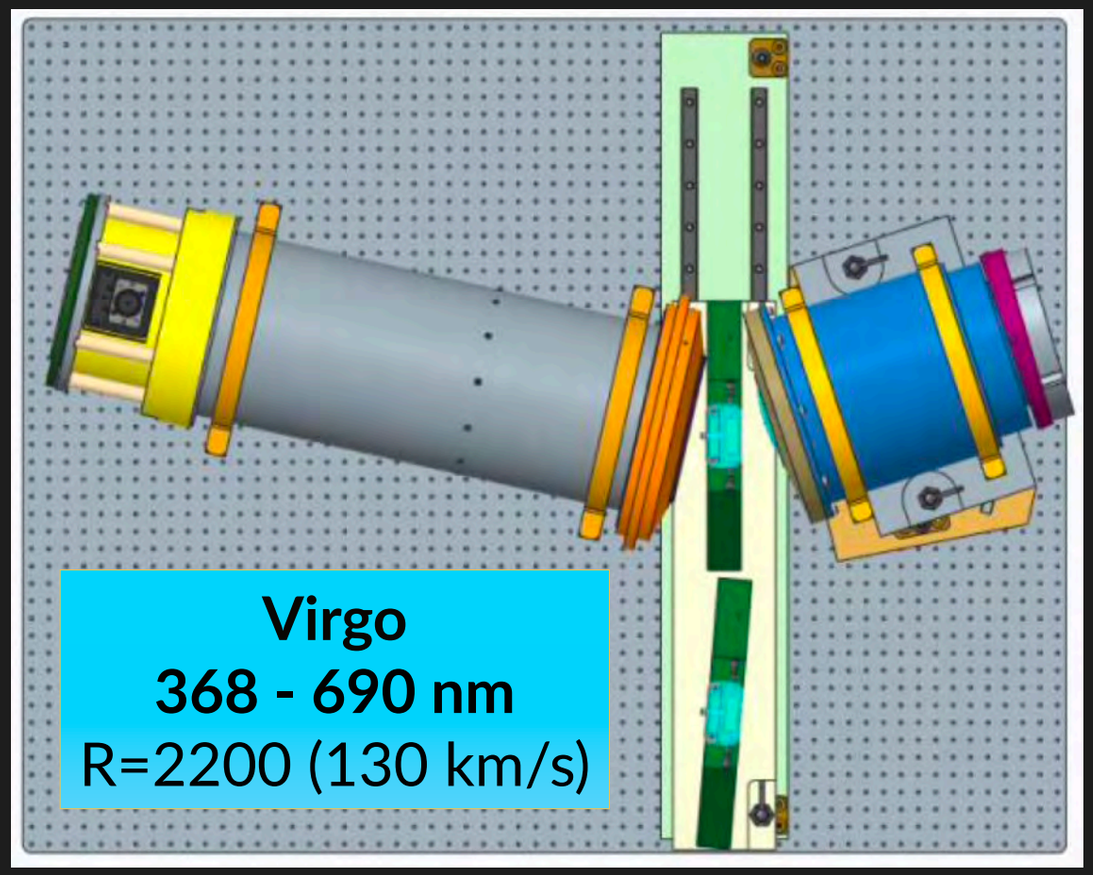

Wasatch Photonics
VPHGs

- ✔ No contamination from 0, -1, -2, and +2 order
- ✔ No ghosts above 10^{-6} flux level
- ✔ More than 80% ensquared energy within 30mm square (=2x2 pixels)

GAMAICA CCD & DETECTORS

TELEDYNE e2V
Everywhereyoulook™

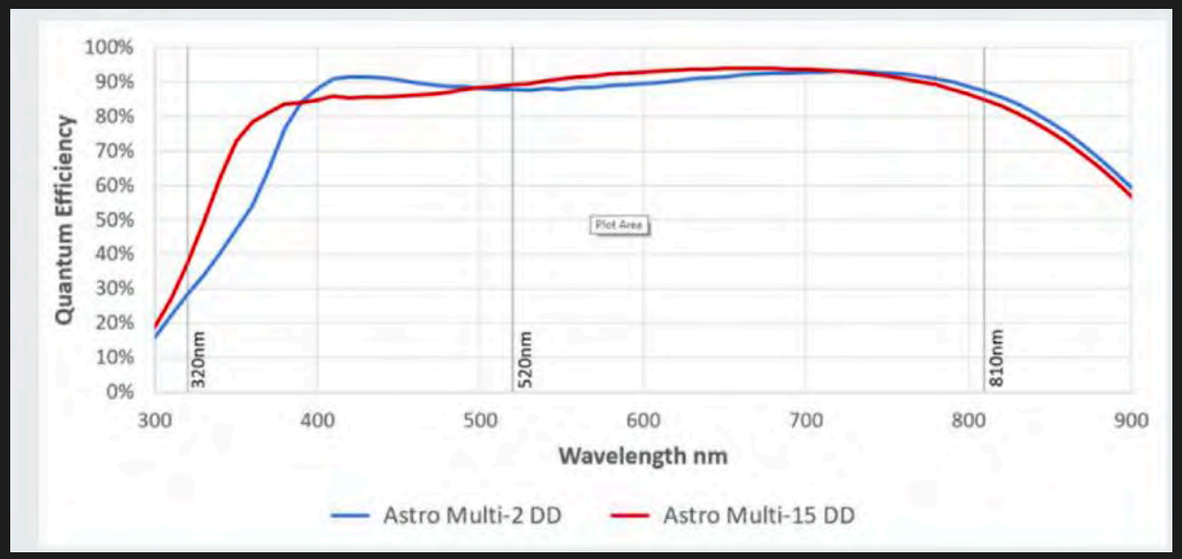

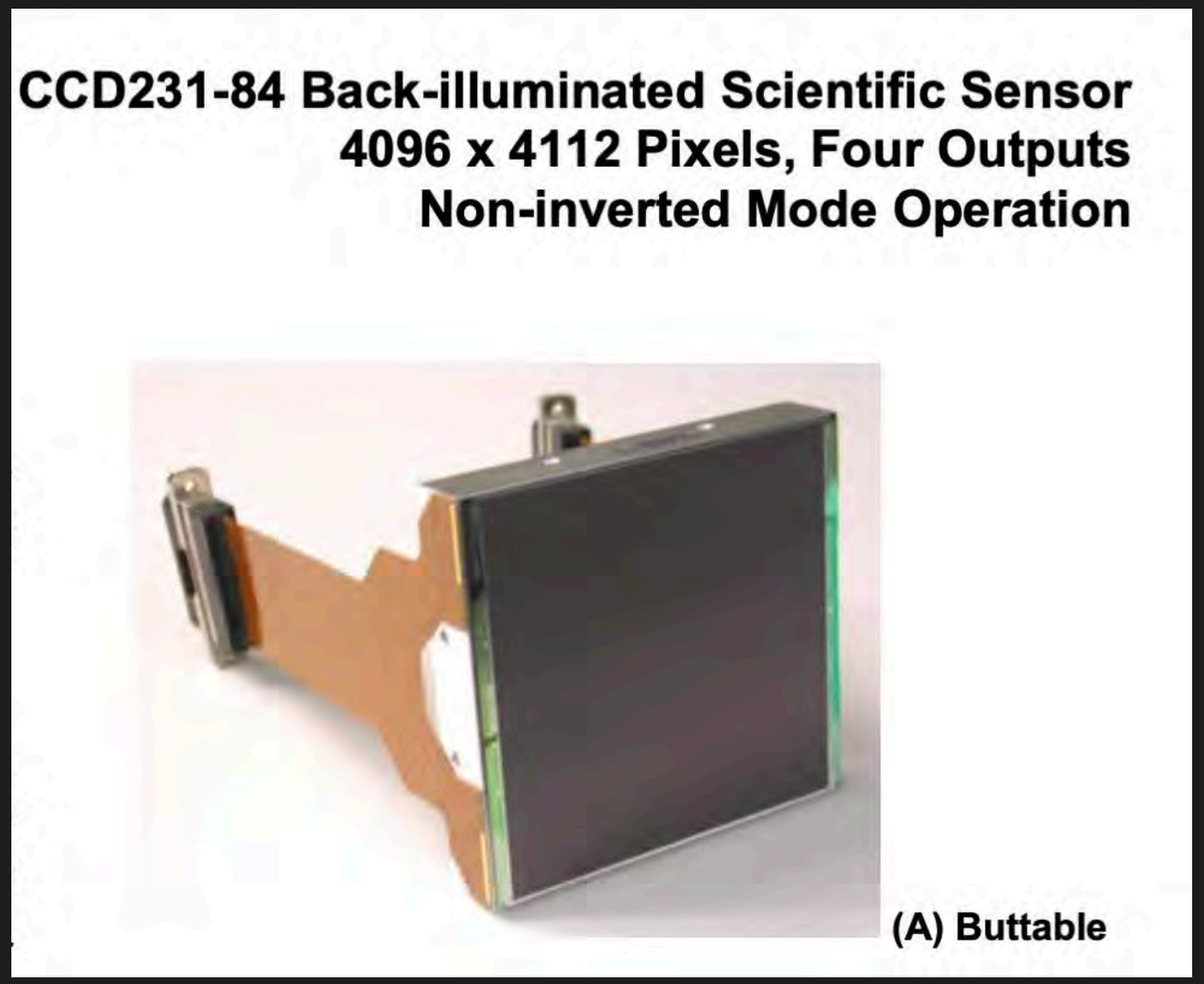

AIP-built detector head

Detector controller: Magellan

Cooling system: Cryotiger® compressors
Low maintenance (1 / year)

2 similar detector system working at the AIP

SPECTROGRAPH ENCLOSURE

Volume: 120 m3
Mass: < 3000 kg

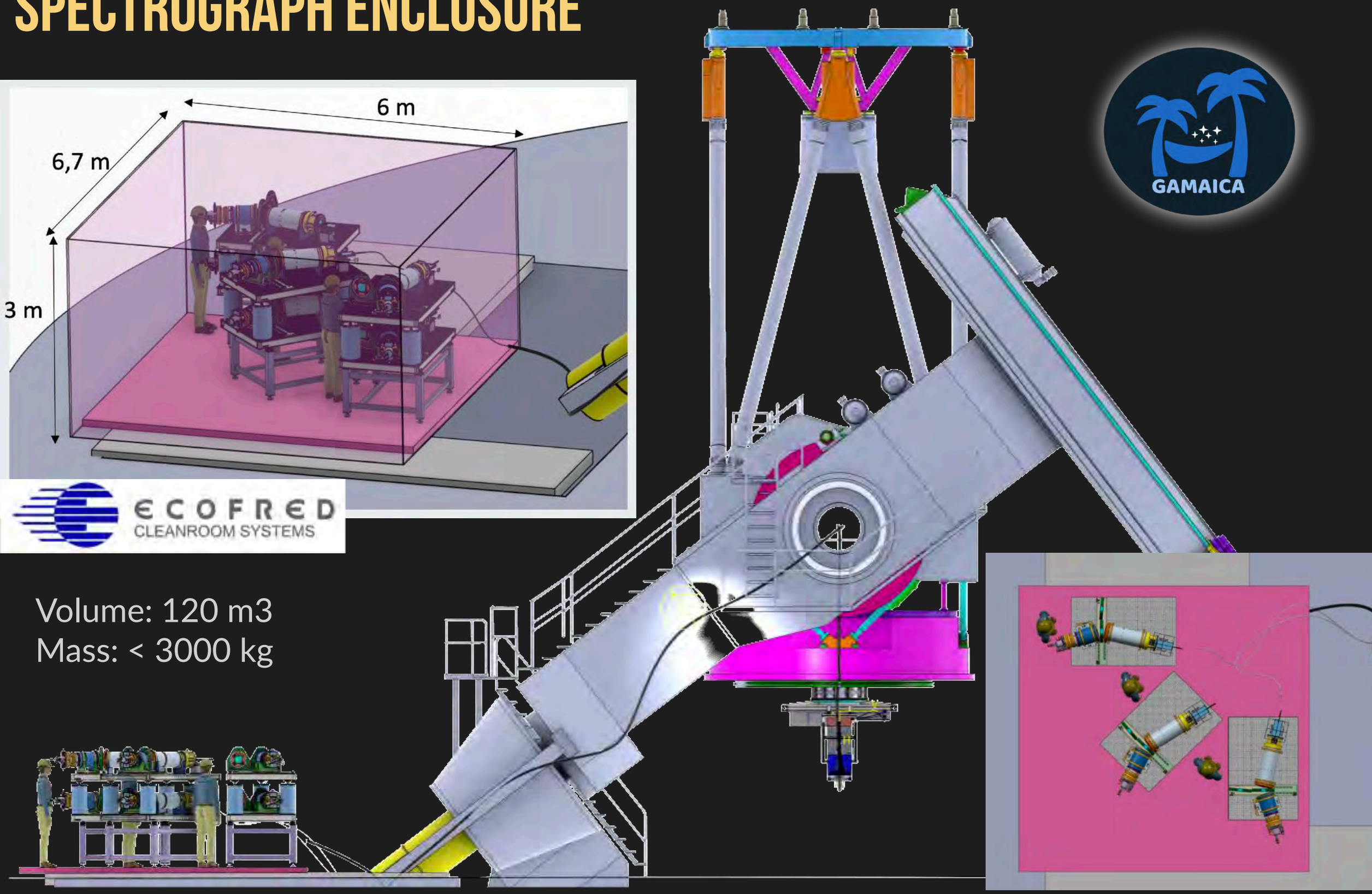

INSTRUMENT CONTROL ELECTRONICS

PLCs BECKHOFF

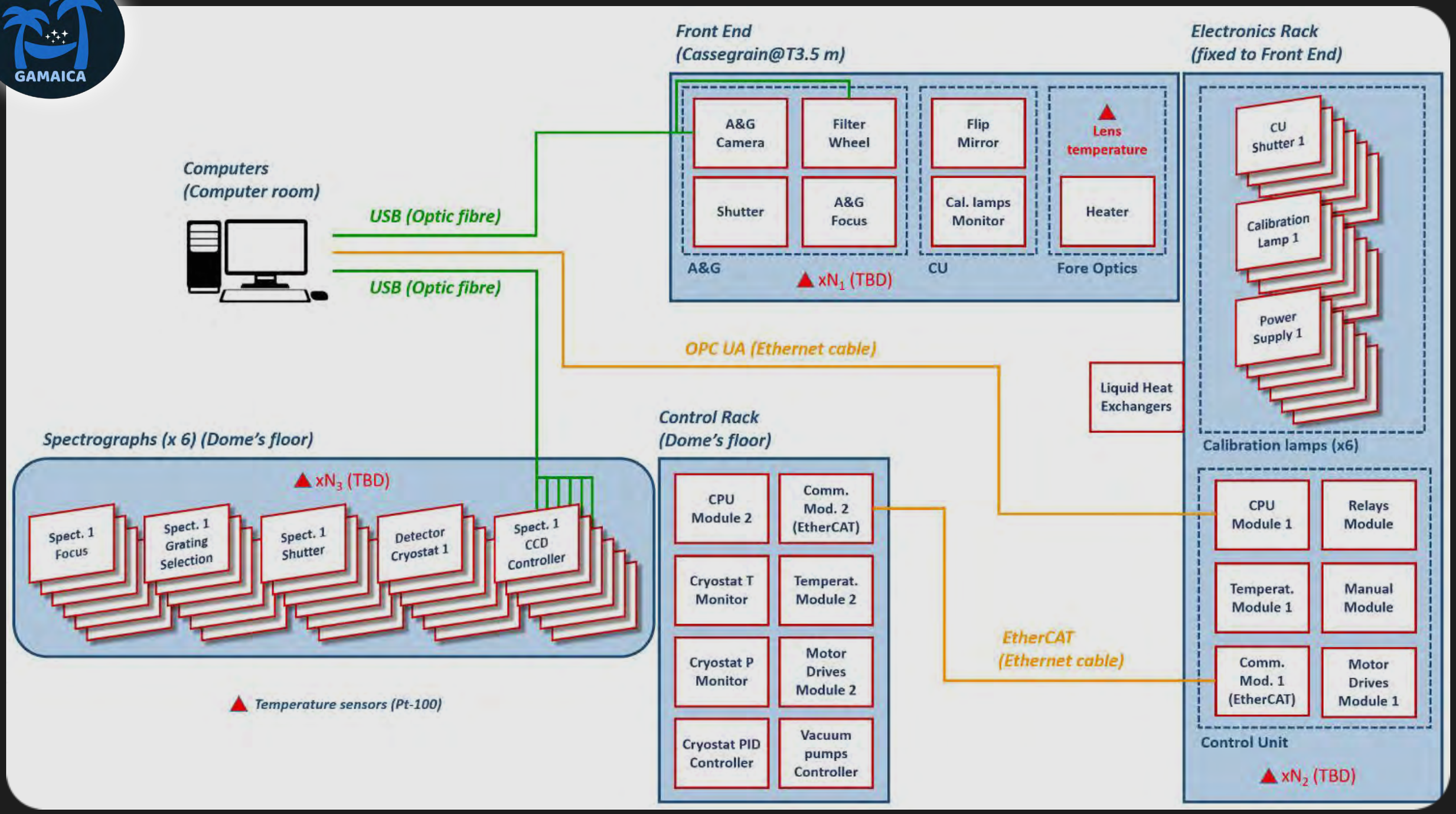

INSTRUMENT CONTROL SOFTWARE

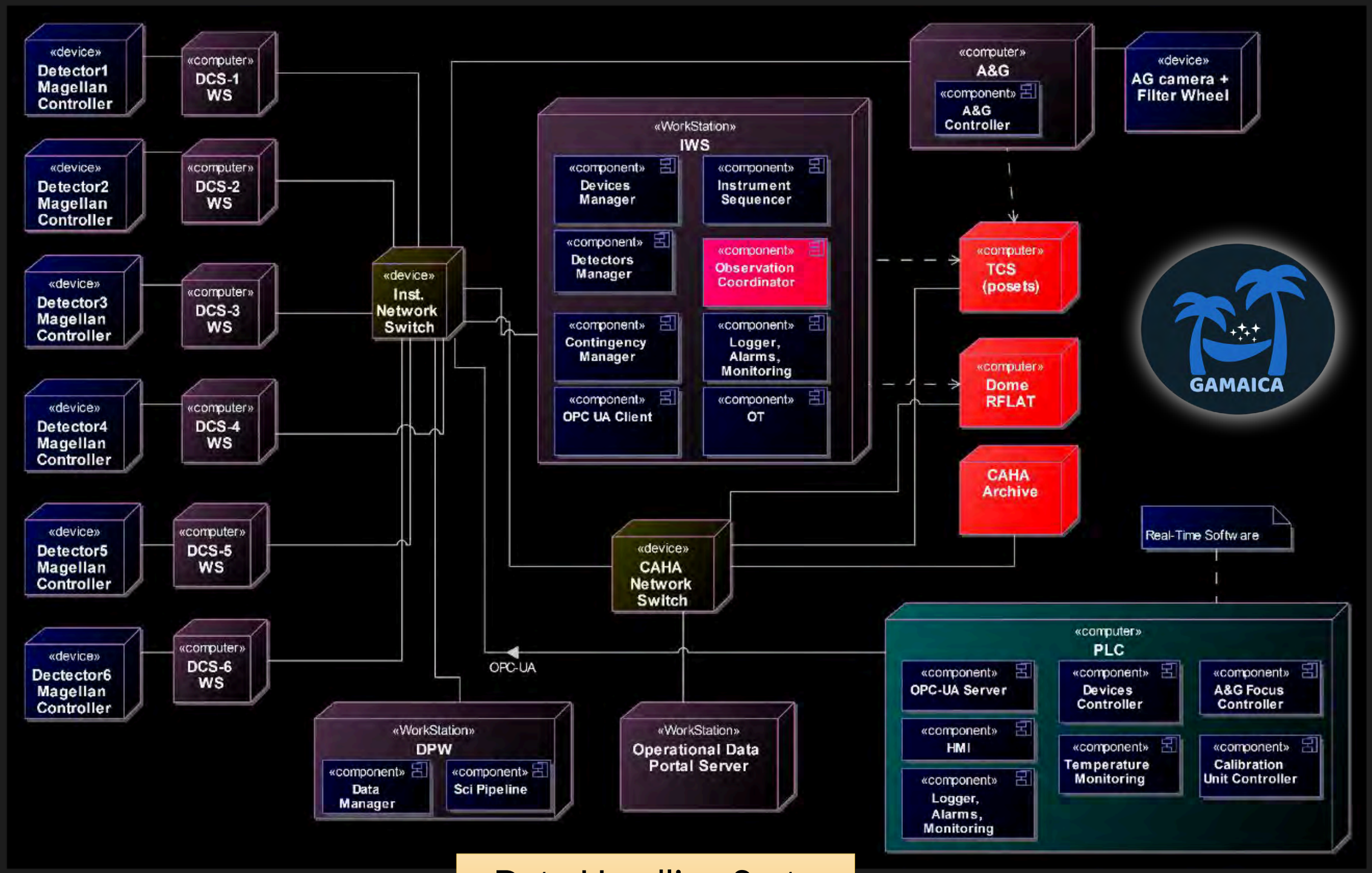

+ Data Handling System

GAMAICA SCHEDULE

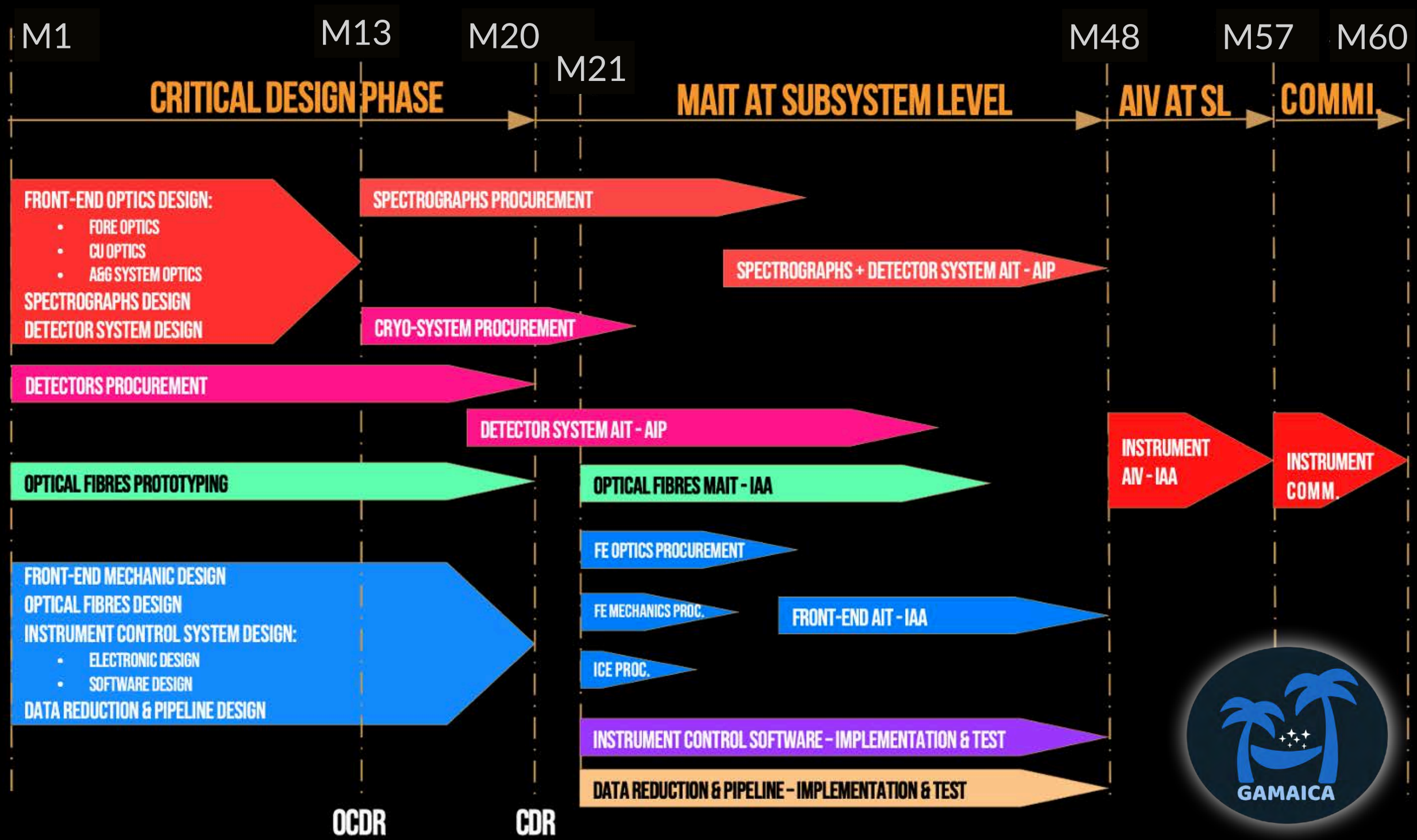

GAMAICA SUMMARY

- Very high TRLs
- Low risks
- Established & competitive budget 4M
- General design for the astronomical community
- Fast track development

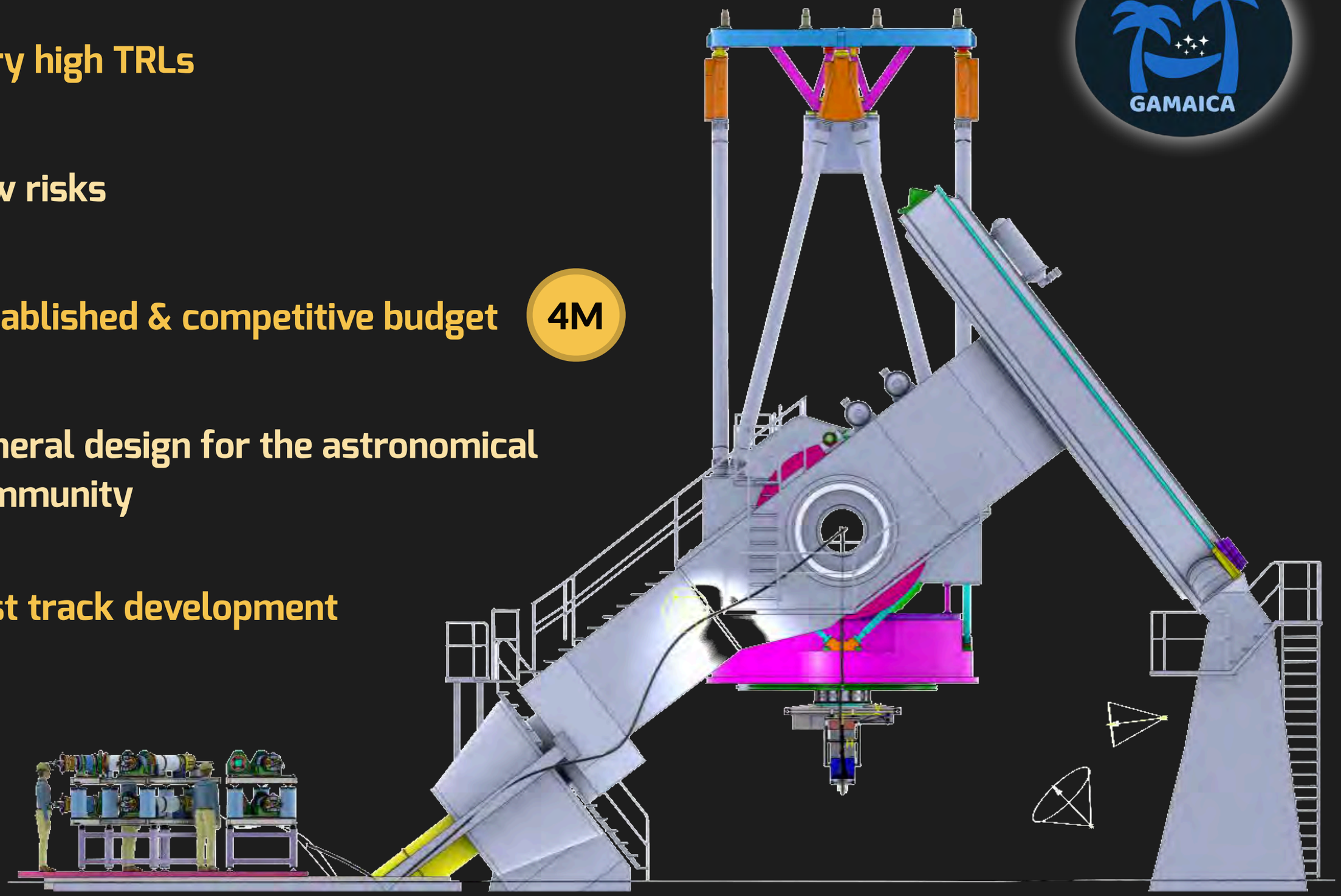

GAIMACA

Instituto de Astrofísica de Andalucía

Miguel Andrés Sánchez Carrasco (SE, PM)
Santiago Becerril Jarque (former PM)
Rocío Calvo (ME)
Leire Elzaurdia (OE)
David Pérez (OE)
Miguel Abril (EE)
José Miguel Ibáñez (SWE)
Rubén García-Benito (co-PI)

Leibniz Institut für Astrophysik Postdam

Andreas Kelz (OE)
Daniel Sablowski (OE)
Svend M. Bauer (ME)
Tomas Fechner (EE)
C. Jakob Walcher (co-PI)

Universidad de Granada

Andrés María Roldán (EE)

Universidad Nacional Autónoma de México (UNAM)

Sebastián Sánchez

Rogelio Bernal©

GAMAICA
A concept for an integral field spectrograph at Calar Alto

RUBÉN GARCÍA-BENITO

& the GAMAICA Team

ENCUENTRO RIA-TEC2SPACE:
INSTRUMENTACIÓN ASTRONÓMICA EN ESPAÑA

April 19-22, 2022

CSIC · Madrid

Rogelio Bernal©